PURATI

Product Coded
FMA-W4364D

Fuoco Mini Adjustable CNC, White, 4000K, 36°, Phase cut

https://purati.com/product/fuocominiadjustablecnc/



DESCRIPTION

Classic, Minimalist and long-lasting durability
A simple and minimal LED architectural downlight with its deep recessed design providing a low glare with UGR<10 for residential, commercial and architectural applications.
Part of the Fuoco Collection

QUICKINFO

GENERAL

Finish	Powder Coated - White
Material	Aluminium
IP	44
Lifespan	>50,000h L80
Warranty	5 years

LED

Lumen	318lm
Efficacy	76lm
CCT	4000K
CRI	>90
SDCM	<2
UGR	<10
Beam Angles	36°

ELECTRICAL

Voltage	220-240V
Power	4W
Driver (Built-in)	Phase cut

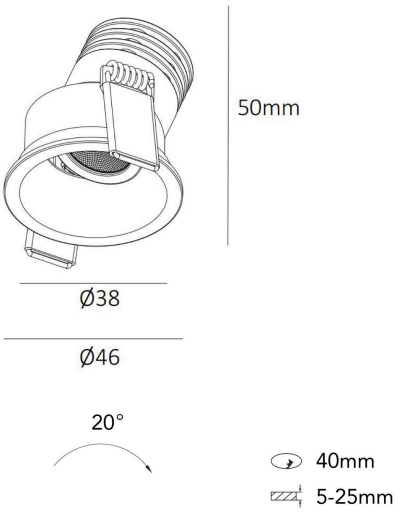

	CE	IP44	CRI >90	5 years

PURATI PTY LTD
Unit 10, 80 O'Riordan St, Alexandria NSW 2015
Tel: +61 2 8065 8181 sales@purati.com